Project _____

AIA # _____ SIS # _____

Item # _____ Quantity _____ C.S.I. Section 114000

R-Series

W-Width Reach-In Refrig/Frzr Model
32" Deep, Self-Contained

Intertek

This unit is listed to the applicable UL, CSA and NSF Standards by an approved NRTL. Consult the factory or unit's data plate for approval information.

AVAILABLE CONFIGURATIONS

R-Series Models	Door(s)
RDT132WUT-HHS	Half Height Solid

- GUARANTEED FOR LIFE CAM-LIFT HINGES

- GUARANTEED FOR LIFE HORIZONTAL WORK FLOW DOOR HANDLES (SOLID DOORS ONLY)

STANDARD PRODUCT FEATURES

- Refrigerated Top Cabinet, Freezer Bottom Cabinet
- Traulsen's Smart Control with LED Display
- Stainless Steel Exterior & Interior
- Balanced, Self-Contained Refrigeration System Using R-450A & R-448A Refrigerants
- Half-Height Stainless Steel Doors with Locks
- Self-Closing Door with Stay Open Feature at 120 Degrees
- Standard Door Hinging: 132W = Right (other hingings available)
- Automatically Activated LED Lights
- Stainless Steel Breaker Caps
- One Adjustable, Coated Wire Shelf Per Cabinet, Supported on Shelf Pins (factory installed)
- Magnetic Snap-In EZ-Clean Door Gasket
- Gasket-Protecting Raised Door Liner
- Thermostatic Expansion Valve Metering Device
- Stainless Steel One-Piece Louver Assembly
- 9' Cord & Plug Attached
- Set of (4) 6" High Adjustable Stainless Steel Legs

ACCESSORIES & OPTIONS

- Stainless Steel Finished Back with Rear Louvers
- Rehinging Feature for Doors
- #1 Type Trayslides to Accommodate either (1) 18" x 26" or (2) 14" x 18" Sheet Pans
- Universal Type Trayslides to Accommodate Either (1) 18" x 26", (2) 14" x 18" Sheet Pans, or (2) 12" x 20" Steam Table Pans
- Additional Coated Wire or Optional Stainless Steel Shelves
- Stainless Steel Banking Strip
- Locking Hasps (padlock supplied by others)
- Export 220-240/50/1 Voltage
- Kool Klad Exterior Laminate Decor (consult factory)
- Set of (4) $4^1/_8$" or 6" High Casters in Lieu of Legs
- 6" Stainless Steel Flanged Legs
- Other Support Options: $4^1/_2$" High Base or 6" High Kickplate (for use with standard legs)
- Clear Glass Doors in Place of Refrigerator Section Solid Doors
- Heat Shield
- Relocate Freezer Compartment
- Contact Factory for Prison/Correctional Facility Options

Approved by_____ Date_____ Approved by_____ Date_____

R-Series

W-Width Reach-In Refrig/Frzr Model
32" Deep, Self-Contained

MODEL

RDT132WUT-HHS

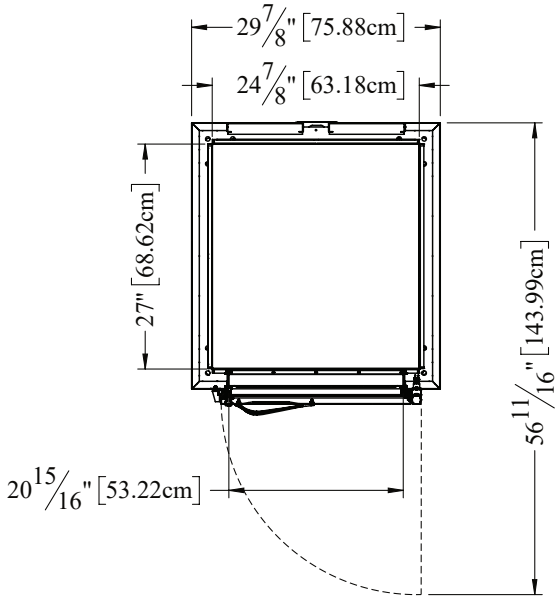

TOP VIEW

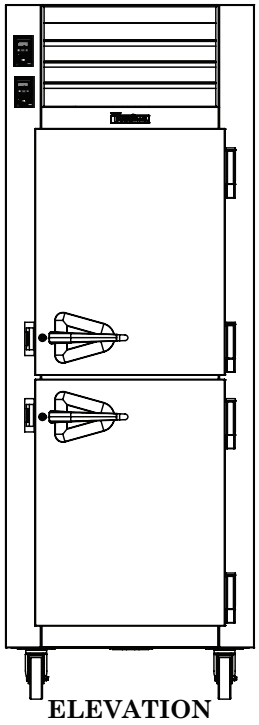

ELEVATION

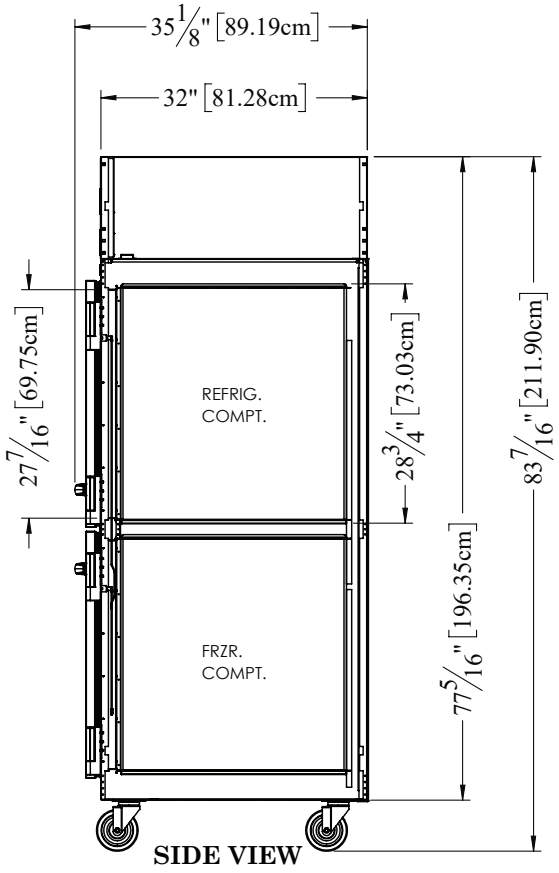

SIDE VIEW

CAD and/or Revit Files Available

https://traulsen.kclcad.com/

R-Series

W-Width Reach-In Refrig/Frzr Model
32" Deep, Self-Contained

MODEL

RDT132WUT-HHS

MODELS	RDT132WUT
DIMENSIONAL DATA	
Net capacity cu. ft.	21.44 (607.1 cu l)
Net capacity refrig. cu. ft.	10.72 (303.6 cu l)
Net capacity freezer cu. ft.	10.72 (303.6 cu l)
Length - overall in.	29 7/8" (75.9 cm)
Depth - overall in.	35 1/8" (89.2 cm)
Depth - over body in.	32" (81.3 cm)
Depth - door open 90° in.	56 11/16" (144 cm)
Clear door width in.	21 15/16" (53.2 cm)
Clear half-door height in.	27 7/16" (69.9 cm)
Height - overall on 6" legs[2]	83 7/16" (211.9 cm)
No. Standard Shelves	2
Shelf area total sq. ft.[3]	9.06 (0.84 sq m)
Shelf area refrigerator sq. ft.[3]	4.53 (0.42 sq m)
Shelf area freezer sq. ft.[3]	4.53 (0.42 sq m)
ELECTRICAL DATA	
Voltage | Plug	115/60/1 | NEMA 5-20P
Full Load Amperes | MDEC[5]	11.9 | 5.35 kWh/Day
REFRIGERATION DATA[4]	
Refrigerant - Refrigerator	R-450A
Refrigerant Charge Amount oz.	11 (311.85 g)
Refrigerant - Freezer	R-448A
Refrigerant Charge Amount oz.	12 (340.2 g)
BTU/HR | H.P.[1] - Refrigerator	1845 | 1/2 HP
BTU/HR | H.P.[1] - Freezer	1930 | 1/2 HP
SHIPPING DATA	
Length - Crated in.	48" (121.9 cm)
Width - Crated in.	42" (106.7 cm)
Height - Crated in.	85" (215.9 cm)
Volume - Crated cu. ft.	99.17 (2808.2 cu l)
Weight - Crated lbs.	557 (252.7 kg)

NOTES: Figures in parentheses reflect metric equivalents.

1. Based on a 90°F ambient and 20°F evaporator for the refrigerated section & a 90°F ambient & -20°F evaporator for the freezer section.
2. 12" Top clearance preferred for optimum performance & service access.
3. Area of standard shelf compliment only, does not include storage area of additional shelves or available on cabinet bottom.
4. Note that single section models employ one evaporator coil & two compressors, data listed reflects total refrigerator/freezer system.
5. MDEC = Maximum Daily Energy Consumption

EQUIPMENT SPECIFICATIONS

CONSTRUCTION, HARDWARE, INSULATION

Cabinet exterior front, one piece sides, louver assembly & door is constructed of heavy gauge stainless steel with #4 finish. Cabinet interior & door liner is also constructed of heavy gauge stainless steel. The exterior cabinet top, back & bottom are constructed of heavy gauge galvanized steel. A set of four (4) adjustable 6" high stainless steel legs are included.

Door is equipped with a gasket-protecting metal door pan, removable plug cylinder locks & guaranteed for life cam-lift, gravity action, self-closing metal, glide hinges with stay open feature at 120 degrees. Hinges include a concealed switch to automatically activate the interior LED lighting. Guaranteed for life, work flow door handle is mounted horizontally over recess in door which limits protrusion from door face into aisleways. Doors have seamless, polished metal corners.

Gasket profile & EZ-Clean material simplify cleaning & increase overall gasket life. Anti-condensate heaters are located behind the door opening. Both the cabinet & door is insulated with an average of 2" thick high density, non-CFC, foamed in place polyurethane.

SELF-CONTAINED REFRIGERATION SYSTEM

A top mounted, self-contained, balanced refrigeration system using environmentally friendly, non-flammable R-450A & R-448A refrigerants is conveniently located behind the one piece louver assembly. It features an easy to clean front facing condenser, thermostatic expansion valve, air-cooled hermetic compressor, large, high humidity evaporator coil located outside the food zone. A 9' cord & plug is provided. Standard operating temperature are 34-38°F for the refrigerator compartment & -5 to 0°F for the freezer compartment (capable of -10°F up to 100°F ambient).

CONTROL

Traulsen's Smart Control features advanced control algorithms & sophisticated diagnostic capabilities to optimize performance. Utilizing Smart Sensors, it adapts the operation of the refrigeration system to a variety of environments & usage patterns. The Smart Control also offers a complete set of visual alarms designed to alert the user to critical events such as power outages or a prolonged door opening. In the event of an alarm, a dedicated Alarm LED will illuminate, informing the user of the critical event and duration.

INTERIOR

Standard interior arrangements include one (1) coated wire shelf per cabinet, mounted on shelf pins. Shelves are full-width & do not have any large gaps between them requiring the use of "bridge" or "junior" shelves. Recommended load limit per shelf should not exceed 225 lbs. Interior arrangements are installed at the factory & EZ-Change interior slides (only) are field installed.

WARRANTY

Both a six year parts and labor warranty and a seven year compressor warranty (self-contained models only) are provided standard.

When ordering please specify: Voltage, Hinging, and Options.

Equipped with one NEMA 5-20P Plug

CONTINUED PRODUCT DEVELOPMENT MAY NECESSITATE SPECIFICATION CHANGES WITHOUT NOTICE.