Project _____

AIA # _____ SIS # _____

Item # _____ Quantity _____ C.S.I. Section 114000

COMMERCIAL REFRIGERATION

DEALERS CHOICE COMPACT UNDERCOUNTERS - R290

UHT SERIES - R290

Compact Undercounter Refrigerator Models/Self-Contained UHT60

STANDARD PRODUCT FEATURES

- Stainless Steel Exterior Top, Sides & Doors
- Anodized Aluminum Interior
- Front Breathing Self-Contained Refrigeration System
- Environmentally Friendly, R-290 Refrigerant
- Self-Closing Stainless Steel Doors with Stay Open Feature at 105° Degrees
- Anodized Aluminum Interior Door Liner
- Interior Mounted Thermometer
- Two (2) Powder Coated Shelves Per Door, Mounted on Pilasters
- Automatic Non-Electric Condensate Evaporator
- Magnetic Snap-In EZ-Clean Door Gasket(s)
- 8' (2.4 m) NEMA Cord & Plug Attached
- Set of Six (6) 4" Casters
- 3-Year Parts & Labor Warranty
- 2-Years Additional Compressor Parts Warranty

ACCESSORIES & OPTIONS (*field installed)

- CK21 (six 6" (15.2 cm) high casters for 60" models)
- CK25 (six 3-1/2" (8.9 cm) high casters for 60" models)
- CK27 (six 2-3/4" (6.9 cm) high casters for 60" models)
- CUACC-LEGSET6 (six 6" (15.24 cm) high legs for 60" models)
- SHELF60 UPPER (upper shelf for 60" models)
- SHELF60 LOWER (lower shelf for 60" models)
- CU60TOP-BSWO (22 ga. stainless steel top with 4" (10.2 cm) backsplash 60")
- Optional accessory kits shipped separately for field installation

Factory Installed Options

Stainless Steel Finished Back * Other Door Hinging

Intertek 4004142 Conforms to UL STD. 471 Cert. to CAN/CSA STD. C22.2 NO.120

NSF CERTIFIED TO ANSI/NSF 7

3-YEAR PARTS & LABOR WARRANTY

This unit is listed to the applicable UL, CSA and NSF Standards by an approved NRTL. Consult the factory or unit's data plate for approval information.

AVAILABLE CONFIGURATIONS

27", 32", 48", 60", 72" Wide Models

Model	Door Style	Hinging
UHT60LR-0300	Two Solid Doors	Left/Right
UHT60LL-0300	Two Solid Doors	Left/Left
UHT60RR-0300	Two Solid Doors	Right/Right

CONTINUED PRODUCT DEVELOPMENT MAY NECESSITATE SPECIFICATION CHANGES WITHOUT NOTICE.

Approved by_____ Date_____ Approved by_____ Date___

MODELS:

UHT60LR-0300, LL-0300, RR-0300

CLICK
TRANSFER
For KCL CADalog Website

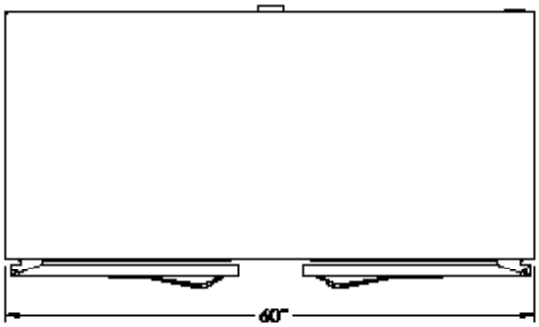

TOP VIEW

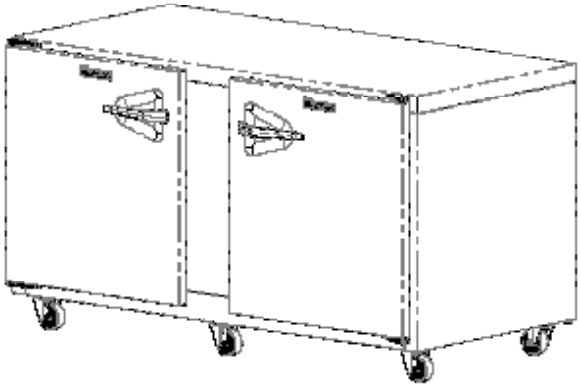

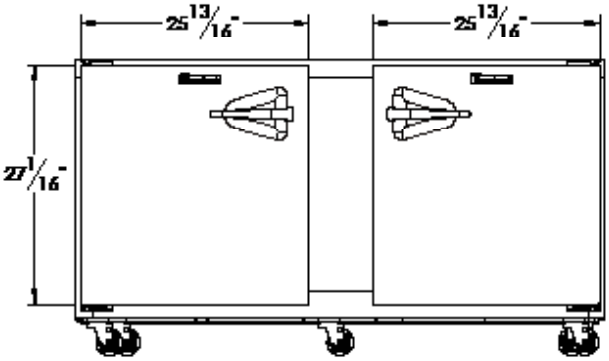

ELEVATION

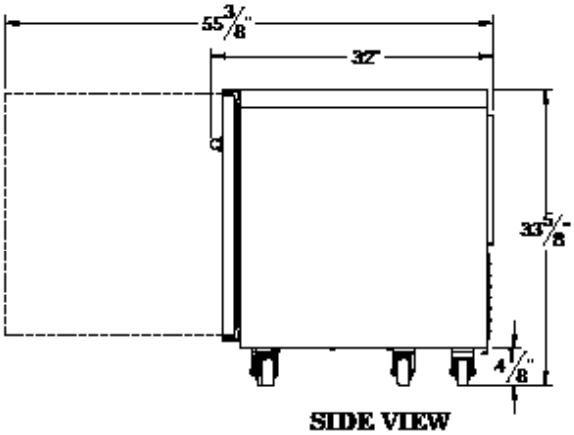

SIDE VIEW

Project _____

AIA # _____ SIS # _____

Item # _____ Quantity _____ C.S.I. Section 114000

COMMERCIAL REFRIGERATION

DEALERS CHOICE COMPACT UNDERCOUNTERS - R290

UHT SERIES - R290

Compact Undercounter Refrigerator Models/Self-Contained

Door Models: UHT60LR-0300, LL-0300, RR-0300

MODELS	UHT60__-0300
CABINET DIMENSIONAL DATA	
Storage cu. ft. (l)	16.7 (473)
Width cabinet in. (cm)	60" (152)
Width - door in. (cm)	25 7/8" (65.7)
Depth - door open 90⁰ in.	55 3/8" (140.7)
Clear door opening in. (cm)	22 3/4" (57.8)
# of doors	2
# of shelves	4
Total shelf Area sq. ft. (m)	13.2 (1.23)
ELECTRICAL DATA & REFRIGERATION DATA 115/60/1 NEMA 5-15P	
Full Load Amps	7.2
MDEC[1] (kWh)	1.2
Refrigerant	R-290
Refrigerant Charge Amount	5 oz
BTU[2]/HR | H.P.	1680 (1/5)
SHIPPING DATA	
Width Crated in. (cm)	69" (175)
Volume Crated cu. Ft. (l)	69 (1954)
Weight lbs. (kg) - Crated	548 (249)

NOTES:
1. MDEC = Maximum Daily Energy Consumption
2. Compressor BTU based on a 90°F (32°C) degree ambient and 20° (-6°C) degree evaporator.
- When ordering please specify: voltage, hinging and optional accessories.

EQUIPMENT SPECIFICATIONS

CONSTRUCTION, HARDWARE, INSULATION

Cabinet exterior front, one piece sides, and doors are constructed of 22 gauge stainless steel. Cabinet interior and door liners are constructed of anodized aluminum. The exterior cabinet back and bottom are constructed of galvanized steel.

Door self-closes at less than 90° and also includes a stay open feature at 105 degrees. Gasket profile and durable material simplify cleaning and increase overall gasket life. Both the cabinet and door(s) are insulated with an average of 2" (5 cm) thick high density, non-CFC, foamed in place polyurethane.

REFRIGERATION SYSTEM

A balanced, rear mounted, front breathing, self-contained refrigeration system using environmentally friendly, R-290 refrigerant is provided. It features a capillary tube, air cooled 1435 BTU. 1/4 hp, hermetic compressor, a forced air evaporator coil and a non-electric condensate evaporator. An 8' (2.4m) NEMA cord and plug is provided. Standard operating temperature for refrigerator models is 34° to 38°F (1.1° to 3.3°C).

INTERIOR

Standard interior arrangements include two (2) powder coated wire shelves per door, mounted on pilasters. These are adjustable in 1/2" (1.27 cm) increments, allowing for a minimum of 1-1/2" (3.81 cm) spacing between shelves.

WARRANTY

Both a three year parts and labor warranty and a five year compressor parts warranty (self-contained models) are provided standard.

CONTINUED PRODUCT DEVELOPMENT MAY NECESSITATE SPECIFICATION CHANGES WITHOUT NOTICE.

Approved by_____ Date_____ Approved by_____ Date___